OWNER'S MANUAL: Performance Series Wallmount Cabinet

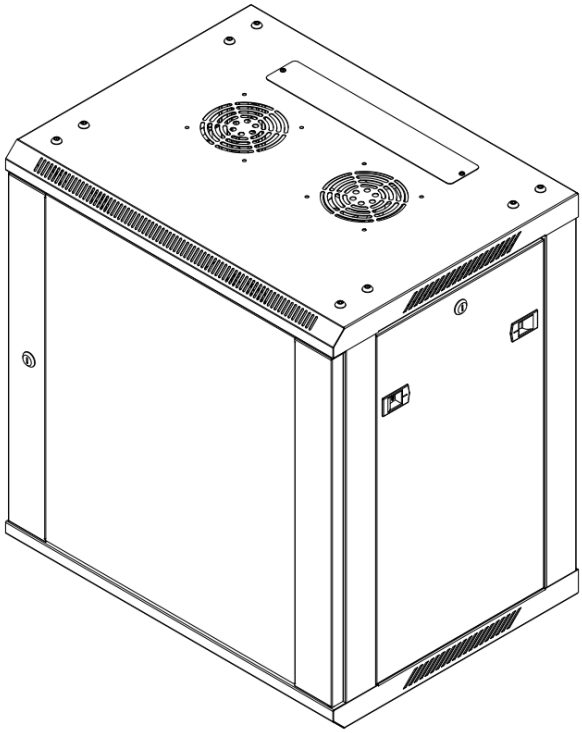

THIS MANUAL APPLIES TO THE FOLLOWING SKUs:					
00301081	00301082	00301083	00301074	00301075	00301078
00301079	00301080	00301076	00301077	00301000	

Keep this information for further reference.

Thank you for purchasing a NavePoint product.

Please examine the product for any damaged parts. If any part is damaged or missing, contact NavePoint for assistance. Do not attempt to install or use product if it has been damaged. This product contains small items that could be a choking hazard – keep these items away from children.

During installation, lay product contents on cardboard or other protective surface to avoid any damage.

Do not use with equipment that is heavier than the indicated weight capacity for this product. This product is designed to be installed indoors on wood stud walls, solid concrete walls or brick walls. Make sure that the supporting surface will safely support the weight of the equipment and all attached hardware and components. It is recommended that installation be performed by a qualified installer. NavePoint cannot be held responsible for damage to equipment or personal injury resulting from improper use or installation of product.

Maintenance: Check that the product is secure and safe to use at regular intervals (at least every three months).

Limitations of Liability: In no event will NavePoint, LLC. be liable for any damages, whether direct or indirect, special, punitive, incidental or consequential damages (including, but not limited to, lost profits or revenue, loss of use, lost business opportunities or loss of goodwill) or for the costs of procuring substitute products, arising out of or in connection with the use of the product, whether such liability arises from any claim based upon contract, warranty, tort (including negligence), product liability or otherwise, whether or not seller has been advised of the possibility of such loss or damage. In no event will seller's total cumulative liability, from all causes of action and all theories of liability, exceed the total amounts actually paid to seller by customer under the order that gives rise to any liability hereunder.

© 2019 NavePoint, LLC

1. Parts Identification

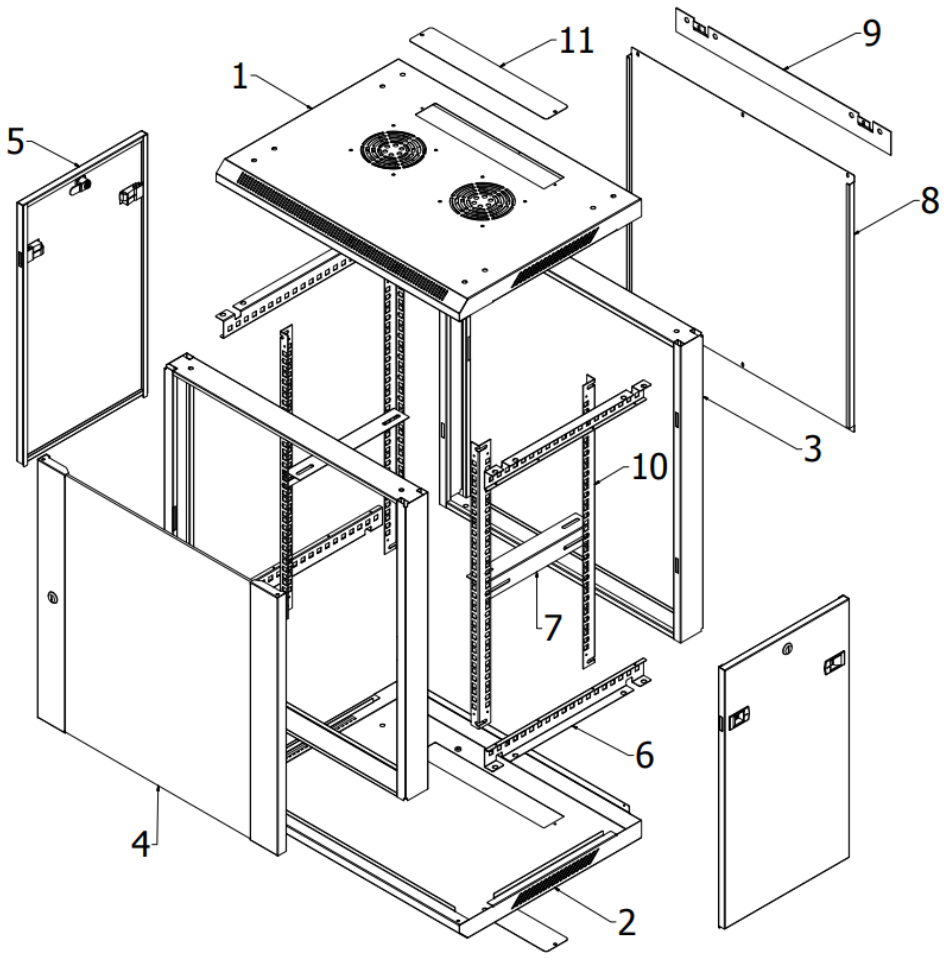

1. Top Panel	x1
2. Bottom Panel	x1
3. Frames	x2
4. Front Door	x1
5. Side Panels	x2
6. Horizontal Beams	x4
7. L Type Mounting Brackets	x2
8. Back Panel	x1
9. Hanger Bar	x1
10. Vertical Mounting Rails	x4
11. Cable Management Covers	x2

Accessories List

A.	M6 Screws	x12
	M6 Cage Nuts	x12
	M6 Plastic Washers	x12
B.	M6*12 Screws	x12 (6U~12U) x24 (15U~22U)
	M6 Cage Nuts	x12 (6U~12U) x24 (15U~22U)
	M6 Plastic Washers	x12 (6U~12U) x24 (15U~22U)
C.	M4 Screw	x12
	White Plastic Washer	x1
D.	M8*12 Hex Head Screw	x16
E.	M8 Flange Nut	x16
F.	Casters (Optional)	x4 (15U~22U)
G.	M6 Self-tapping Screw	x16 (For Casters)
H.	Lock Kit	x1
I.	Anchors	x4
J.	Ground Wire Kit	x1

2. Cabinet Assembly

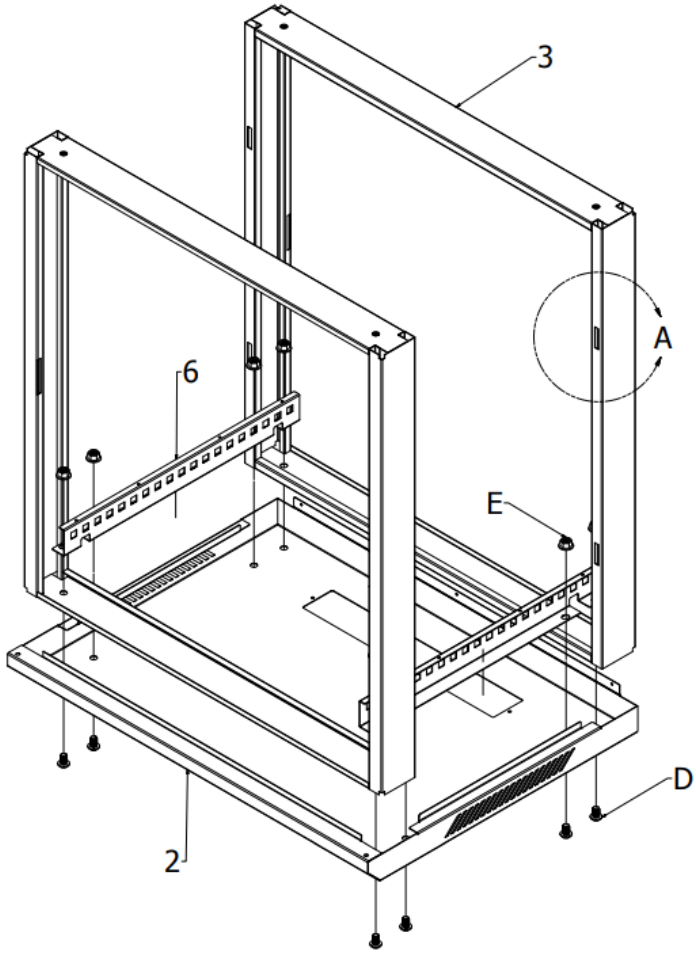

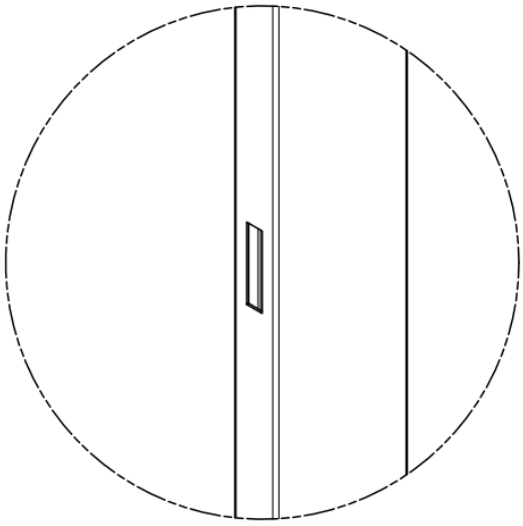

Detail A

STEP 1.
Lay Bottom Panel (#2) on the hard surface. Insert Front and Rear Frames (#3) with large flange oriented to the inside. Be sure that the slots in the center of the frames are facing inward as shown in **Detail A.**

Overlay the Horizontal Beams(#6) so that the notches interlay with large flanges on the Front and Rear Frames (#3). Be sure to orient the Horizontal Beams (#6) so that the flat, cage nut surface is **facing inward**.

Attach with 8 M8 Hexagon Screws (Bag D) and 8 M8 Flange Nuts (Bag E).

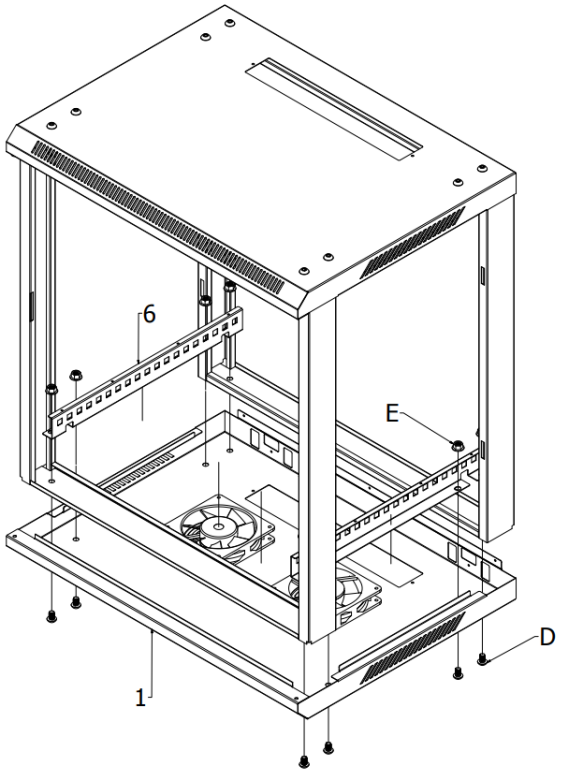

STEP 2.
Place the Top Panel (#1) on the hard surface. Turn the assembly over and insert it into the top panel. Be sure that the Top and Bottom Panels (#1 and #2) are oriented in the same direction (front matches front, back matches back).

Overlay the Horizontal Beams(#6) so that the notches interlay with large flanges on the Front and Rear Frames (#3). Be sure to orient the Horizontal Beams (#6) so that the flat, cage nut surface is facing inward.

Attach with 8 M8 Hexagon Screws (Bag D) and 8 M8 Flange Nuts (Bag E).

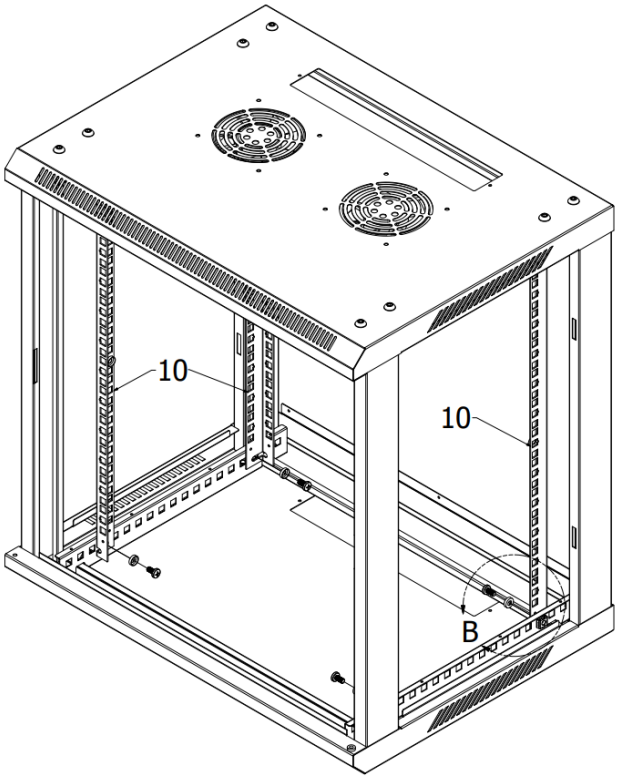

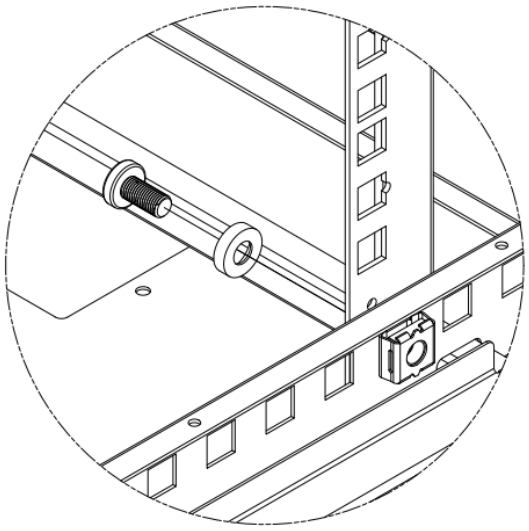

Detail B

STEP 3.
Install the 4 Vertical Rack Rails (#10) to the Horizontal Beams (#6) at the desired depth using the Cage Nut Kit provided (Bag A). When determining the appropriate depth, be sure to consider the equipment that you plan to mount inside the enclosure.
Note: Be sure that the rail depth is the same on both sides of the cabinet.

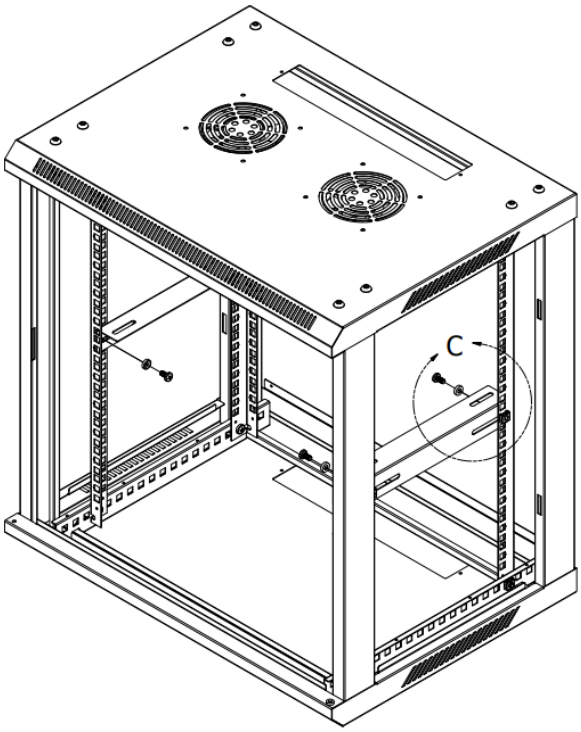

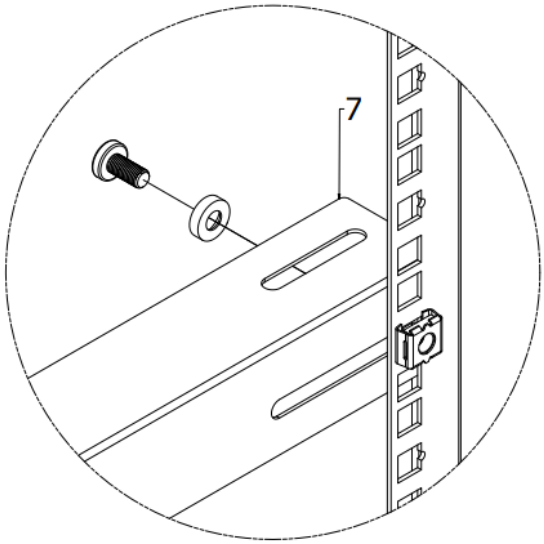

Detail C

Optional: Mount L Type Mounting Brackets (#7) to the Vertical Mounting Rails on each side of the cabinet using the Cage Nut Kit provided (Bag A). (Note: To mount the L Type Mounting Brackets (#7), the depth between front and back vertical rails should be 11'' (280mm) for 450mm depth cabinet and 16.9'' (430mm) for 600mm depth cabinet.)

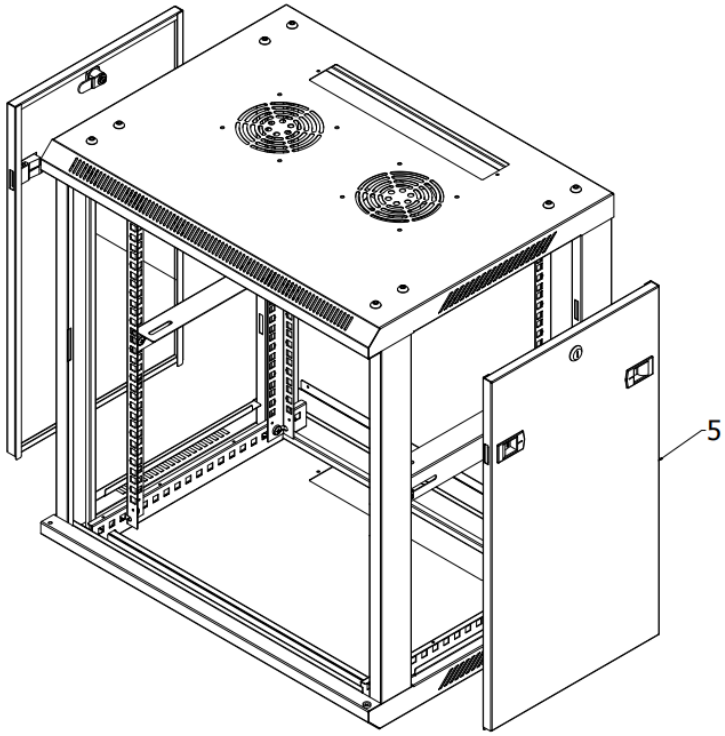

STEP 4.
Install the two Side Panels (#5) into place using the Side Panel Latches. Once each Side Panel (#5) is attached, test to ensure that each Side Panel Lock locks properly.

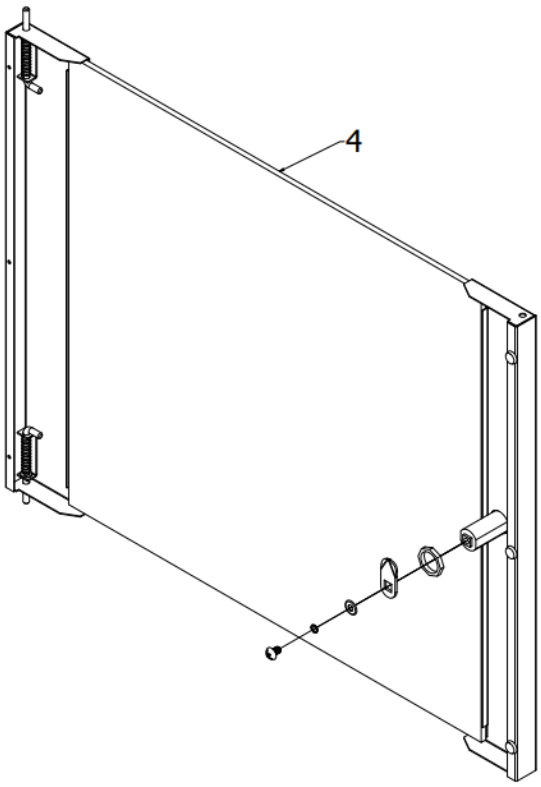

STEP 5.
Install the Front Door Lock (Bag H) on the Front Door (#4) as shown in left picture.

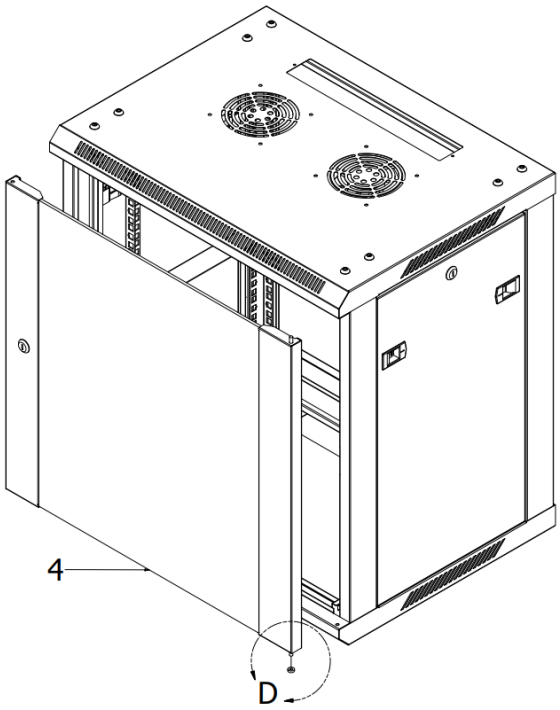

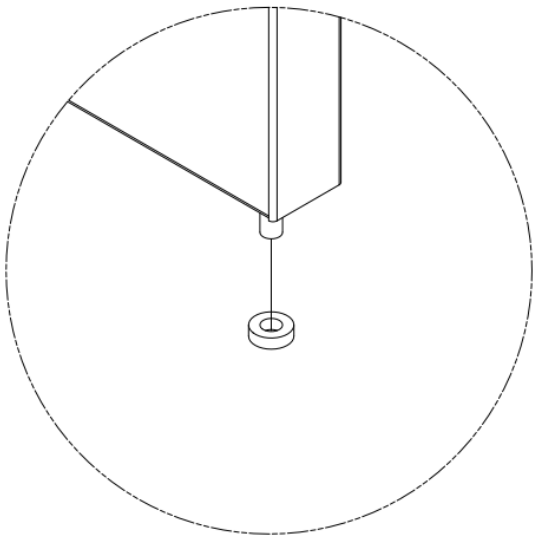

Detail D

STEP 6.
To attach the Front Door (#4) to the cabinet, locate the side with the two pins. Insert the bottom fixed pin with White Plastic Washer (Bag C) into the door hinge hole. With your thumb, pull down on the top spring pin and slide it into place over the second door hinge hole and release. NOTE: Each side of the front of the cabinet has door hinge holes; this allows you to choose the door swing orientation.

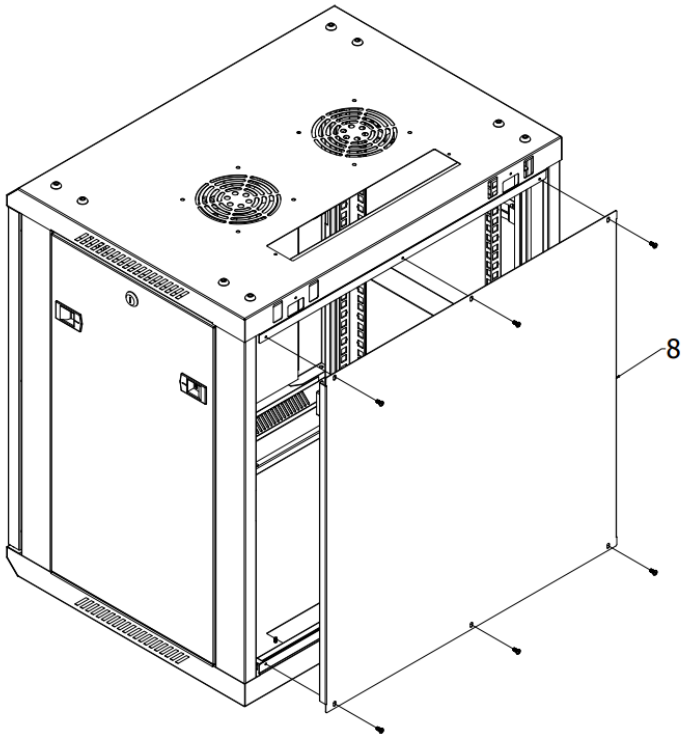	STEP 7. Attach the Back Panel (#8) to the cabinet using 6 black M4 Screws (Bag C).
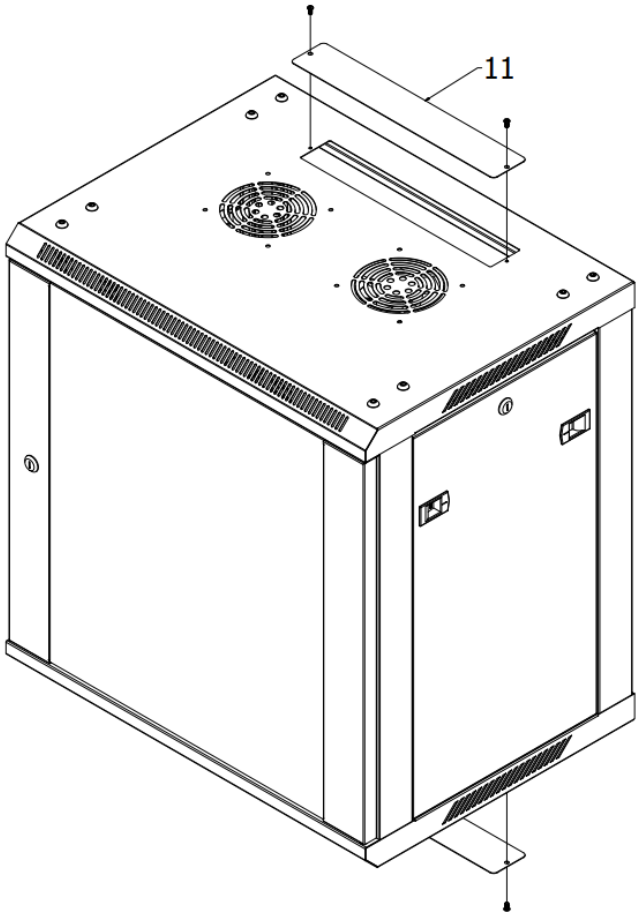	**Optional:** Attach the Top and Bottom Cable Management (#11) Covers using 4 M4 Screws (Bag C) .

3. Mounting the Cabinet to the wall

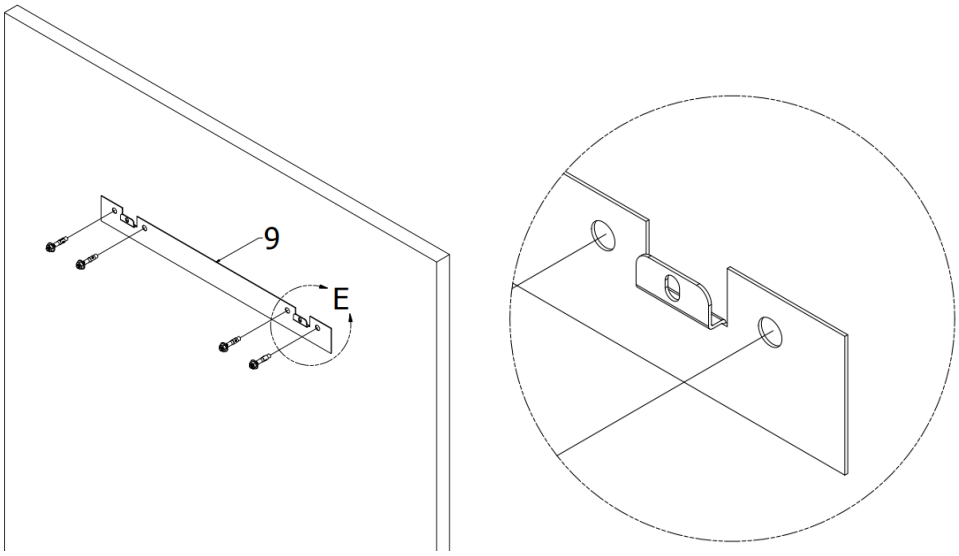 **Detail E**	Attach the Hanger Bar (#9) to a wall or other suitable mounting surface using 4 appropriate anchors. **Note:** When mounting the mounting plate to the wall, be sure the 2 mounting hooks are **facing outwards** and away from the wall.
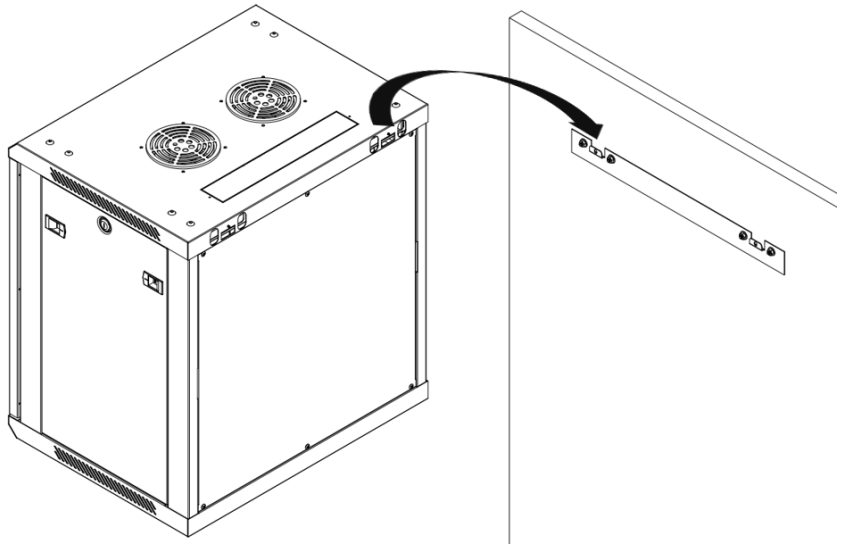	After the Hanger Bar (#9) has been securely attached to the mounting surface, hang the cabinet's 2 mounting notches onto the 2 mounting hooks on the plate attached to the wall. The notches will fit over the hooks and the enclosure should slide down onto the hooks until secure.

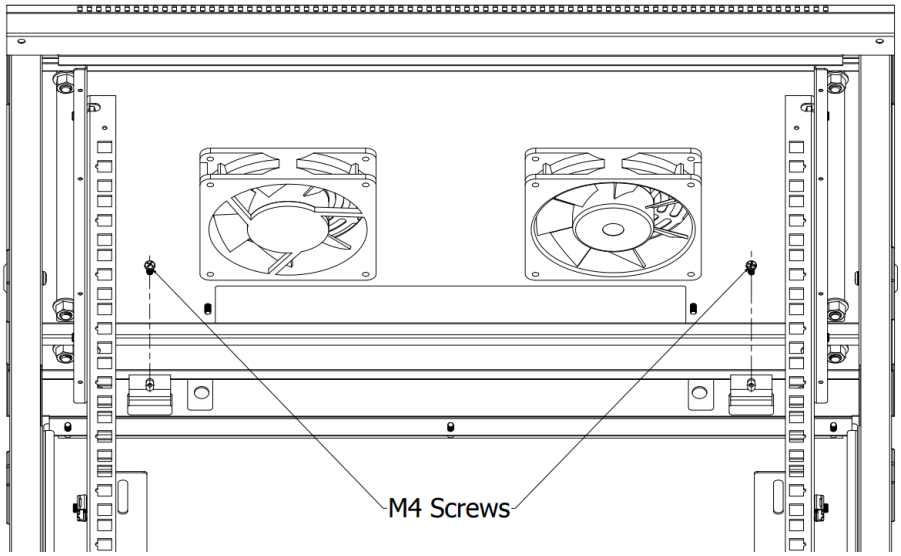

After the Hanger Bar (#9) has been secured and the cabinet hung properly, secure the cabinet to the mounting plate using 2 M4 Screws (Bag C) in the holes on the mounting hooks as shown.

Warning: Do not attempt to mount to wall, when equipment is mounted inside cabinet. The cabinet can hold up to 130 pounds evenly distributed. Make sure wall surface can hold weight of the cabinet and equipment.

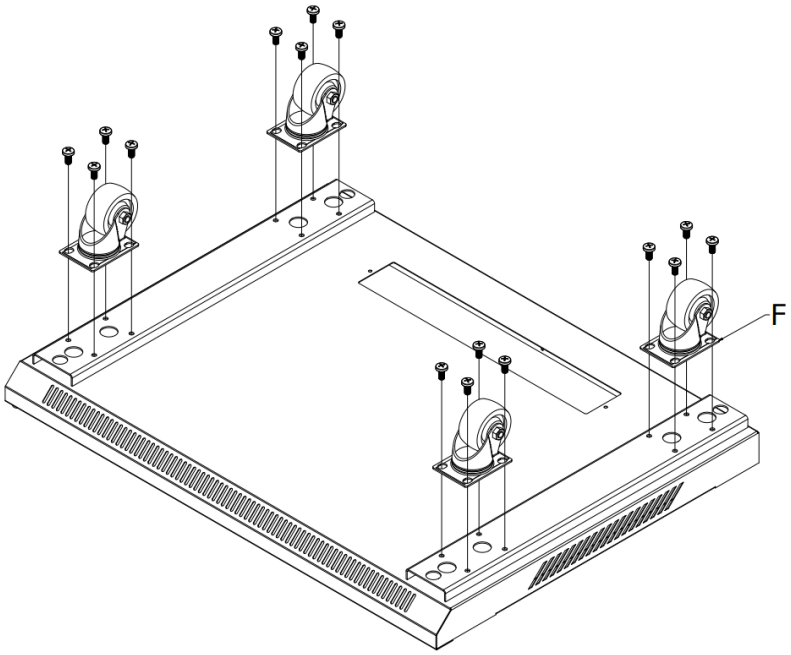

Optional: Attach Casters (Bag F) with 16 M6 Self Tapping Screws (Bag G) to Bottom Panel (#2).

(**Optional and only compatible and included with 15, 18 and 22U versions of the Performance Series Cabinets)**

4. Equipment Installation

1 Rack Unit	
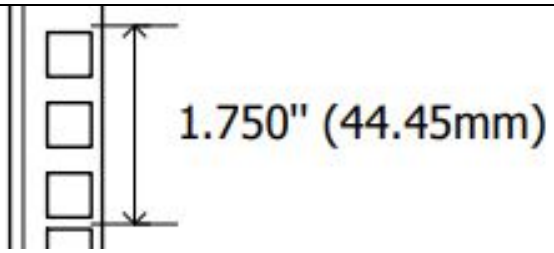	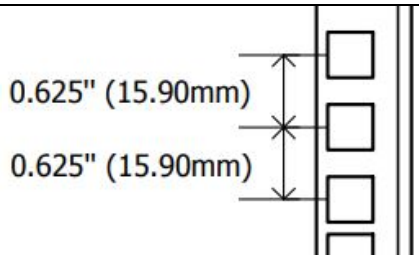

-Squared Hole Mounting

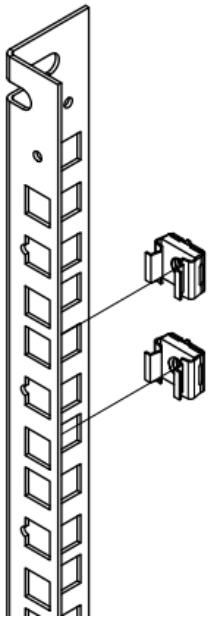	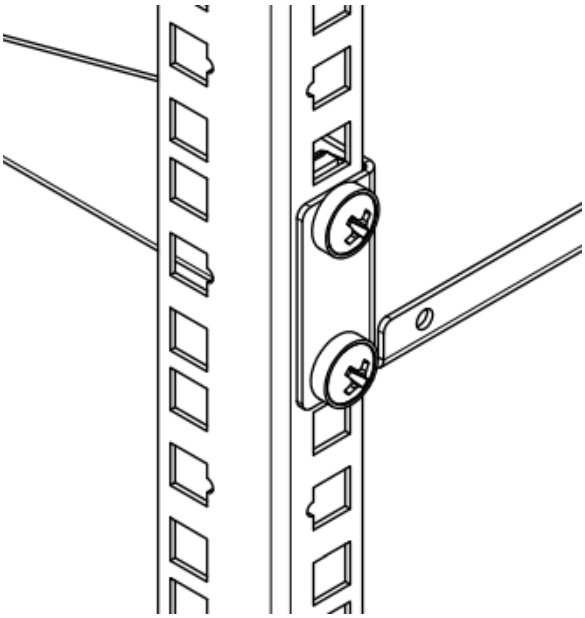

1 Locate the numbered square openings in the Vertical Mounting Rails (#10) where you plan to install your equipment. Install M6 Cage Nuts (Bag B) into the square openings to provide an attachment point for the M6 Mounting Screws (Bag B). Note: Consult your equipment documentation to determine how many cage nuts will be required and where they will need to be installed.

a- From the inside of the Vertical Mounting Rails (#10), insert one of the flanges of the cage nut through the square opening. Press it against the side of the square opening.

b- Compress the cage nut at the sides slightly to allow the remaining flange to fit through the square opening. When the cage nut is properly installed, both flanges will protrude through the square opening and will be visible on the outer surface of the mounting rail. Repeat steps 1a and 1b until all required cage nuts are installed.

2 After installing the required cage nuts, use the included M6 Mounting Screws (Bag B) and M6 Plastic Washers (Bag B) to secure your equipment into the installed M6 Cage Nuts.