OWNER'S MANUAL: Pro Series Wall-Mount Cabinet

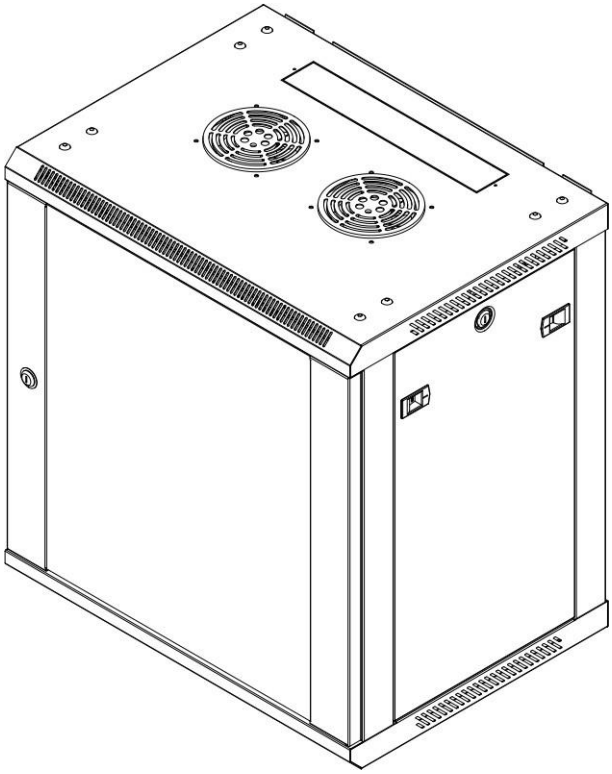

THIS MANUAL APPLIES TO THE FOLLOWING SKUs:				
00300727	00300728	00300729	00300730	00300782
00300783	00300784	00300785	00300786	00300787
00301249	00301250	00301251	00301252	00301253
00301254	00301255	00301256	00301257	00301258

Keep this information for further reference.

Thank you for purchasing a NavePoint product.

Please examine the product for any damaged parts. If any part is damaged or missing, contact NavePoint for assistance. Do not attempt to install or use product if it has been damaged. This product contains small items that could be a choking hazard – keep these items away from children.

During installation, lay product contents on cardboard or other protective surface to avoid any damage.

Do not use with equipment that is heavier than the indicated weight capacity for this product. This product is designed to be installed indoors on wood stud walls, solid concrete walls or brick walls. Make sure that the supporting surface will safely support the weight of the equipment and all attached hardware and components. It is recommended that installation be performed by a qualified installer. NavePoint cannot be held responsible for damage to equipment or personal injury resulting from improper use or installation of product.

Maintenance: Check that the product is secure and safe to use at regular intervals (at least every three months).

Limitations of Liability: In no event will NavePoint, LLC. be liable for any damages, whether direct or indirect, special, punitive, incidental or consequential damages (including, but not limited to, lost profits or revenue, loss of use, lost business opportunities or loss of goodwill) or for the costs of procuring substitute products, arising out of or in connection with the use of the product, whether such liability arises from any claim based upon contract, warranty, tort (including negligence), product liability or otherwise, whether or not seller has been advised of the possibility of such loss or damage. In no event will seller's total cumulative liability, from all causes of action and all theories of liability, exceed the total amounts actually paid to seller by customer under the order that gives rise to any liability hereunder.

© 2020 NavePoint, LLC

1. Parts Identification

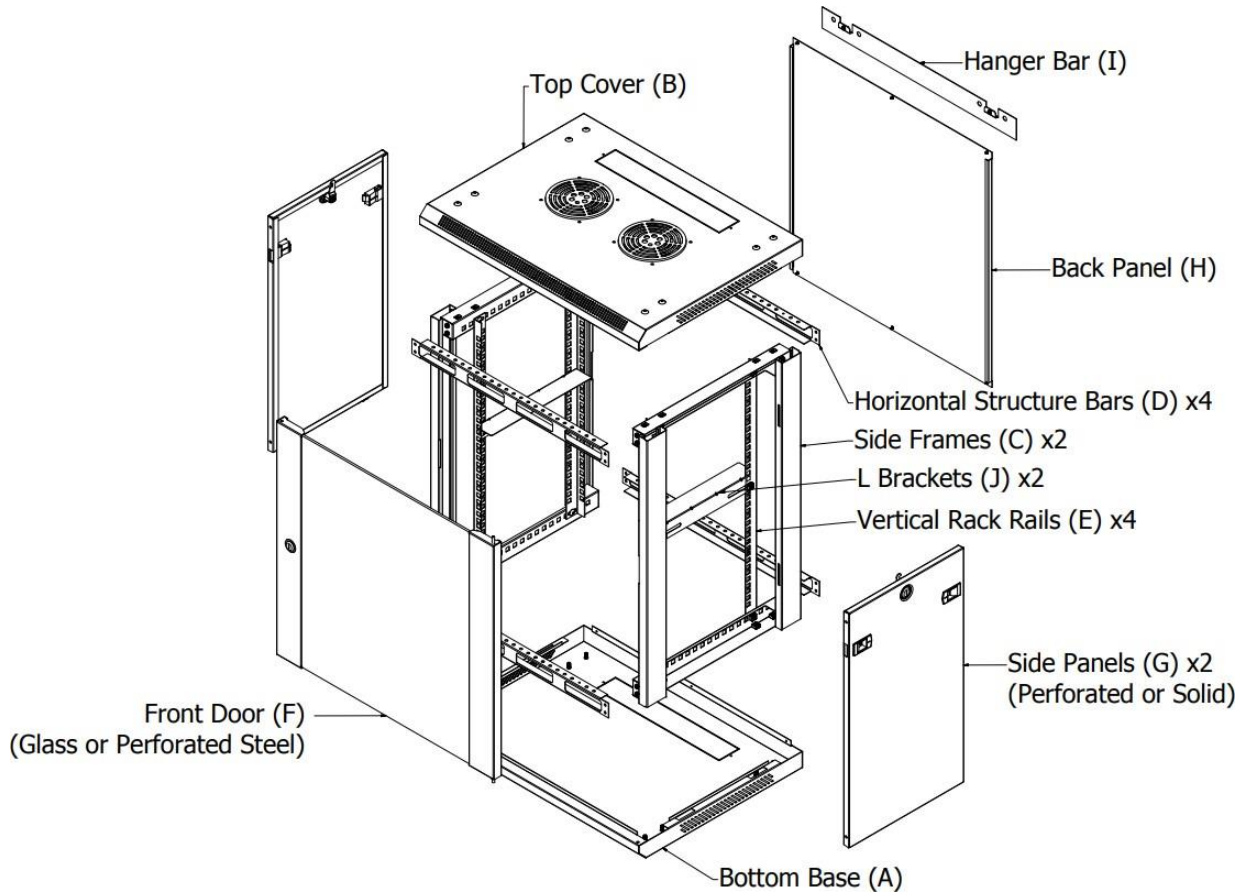

(K)



M6 Hex Head Screws
(Black)
6U,9U,12U (28x)
15U,18U (32x)

(L)



M5 Screws
(Silver)
(18x)

(M)



M3.5 Screws
(Black)
(10x)

(N)



M6 Mounting Screws
(Silver)
(10x)

(O)



M6 Cage Nuts
(Silver)
(10x)

(P)

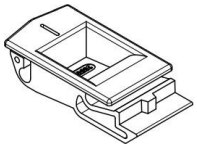

Side Panel Latches (4x)

(Q)

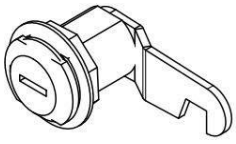

Side Panel Locks (2x)

(R)

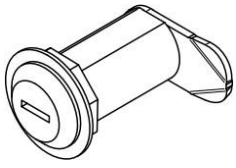

Front Door Lock (1)

(S)

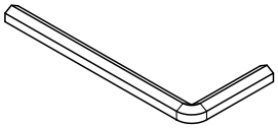

Hex Wrench (1)

2. Cabinet Assembly

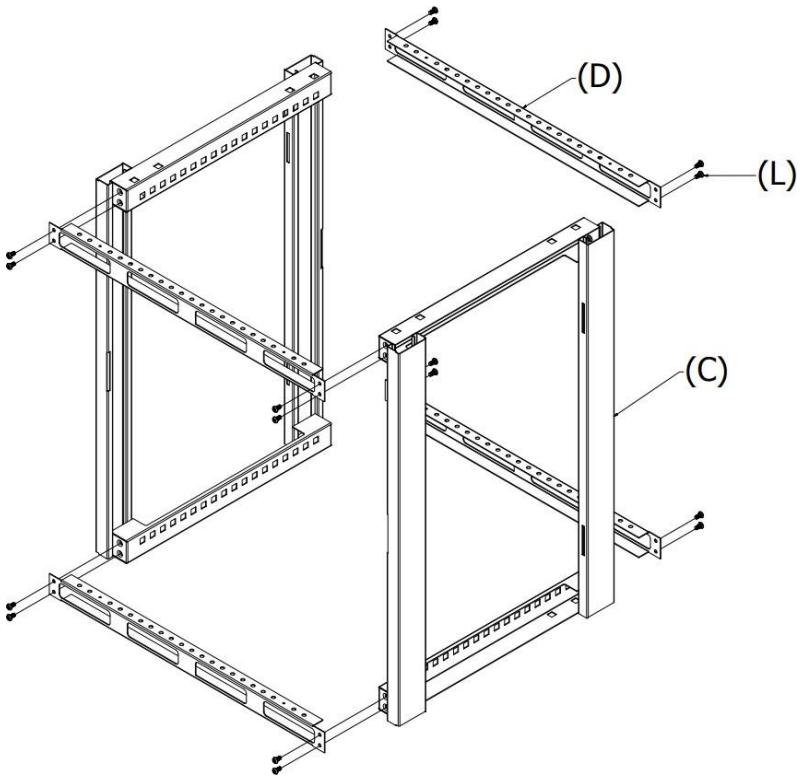

STEP 1. Attach the 4 Horizontal Structure Bars (D) to the Side Frames (C) using 16 silver M5 Screws (L).

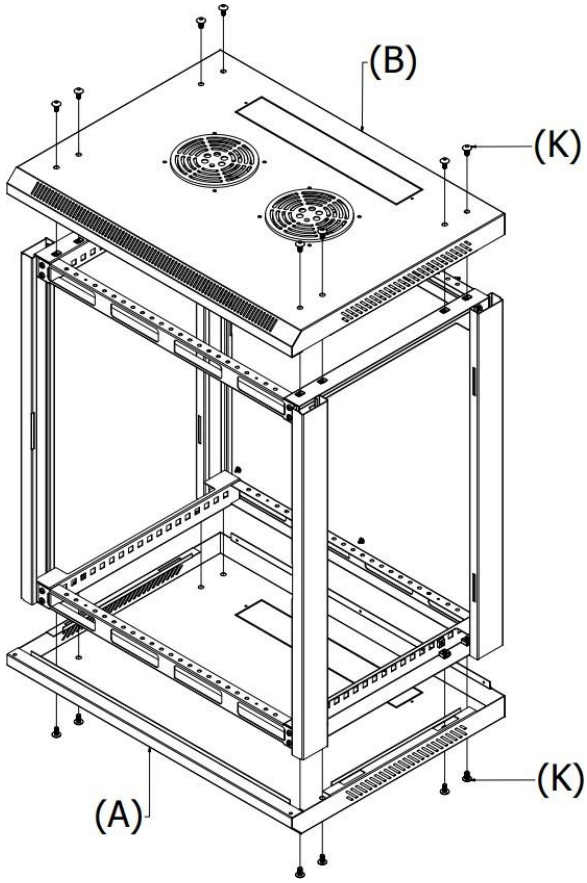

STEP 2. Insert the Cabinet Frame built in previous step into the Bottom Base(A). Secure with 8 black M6 Hex Head Screws (K) using the Hex Wrench(S).

STEP 3. Place the Top Cover (B) onto the Cabinet Frame built in STEP 1. Secure with 8 black M6 Hex Head Screws (K) using the Hex Wrench(S).

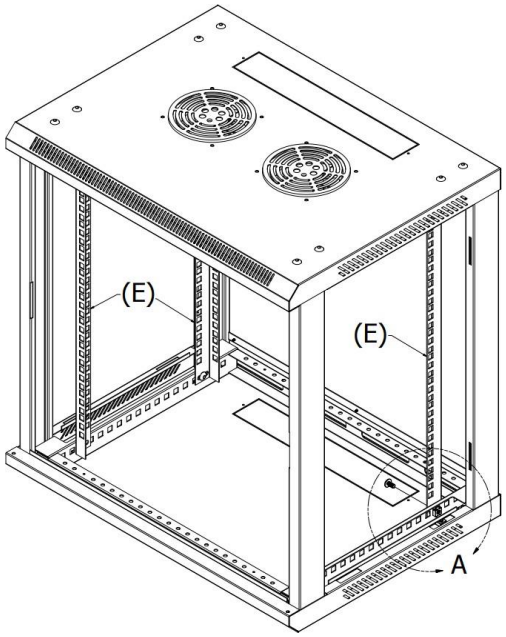

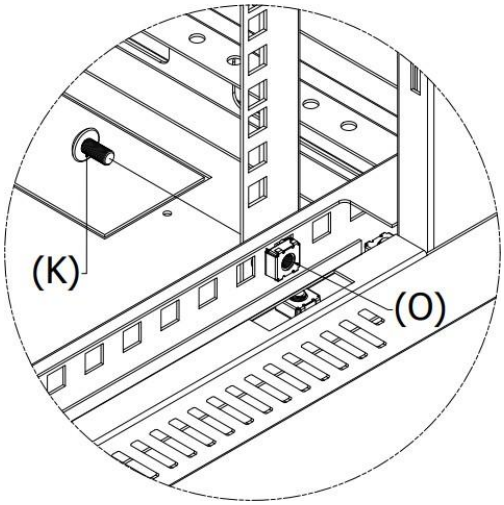

Detail A

STEP 4. Install the 4 Vertical Rack Rails (E) into place at the desired depth using 2 black M6 Screws (K) and 2 silver M6 Cage Nuts (O) for each Rack Rail (E). When determining the appropriate depth, be sure to consider the equipment that you plan to mount inside the enclosure.
Note: Be sure that the rail depth is the same on both sides of the cabinet.

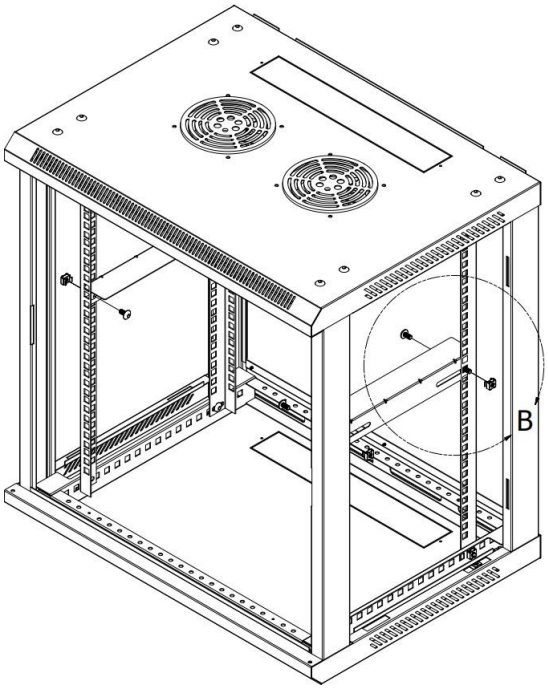

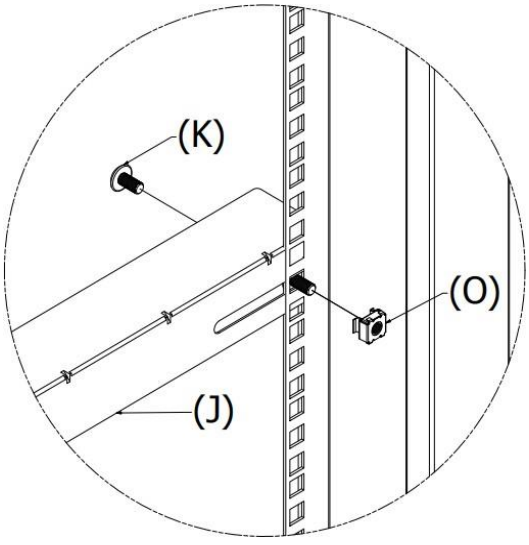

Detail B

Optional: Mount L Brackets (J) or other shelving accessories at desired height, using 2 black M6 Hex Head Screws (K) and 2 silver M6 Cage Nuts (O) for each Rack Rail (E).
(Note: To mount the L Brackets (J), the depth between front and back vertical rails should be 11'' (280mm) for 450mm depth cabinet and 16.9'' (430mm) for 600mm depth cabinet.)

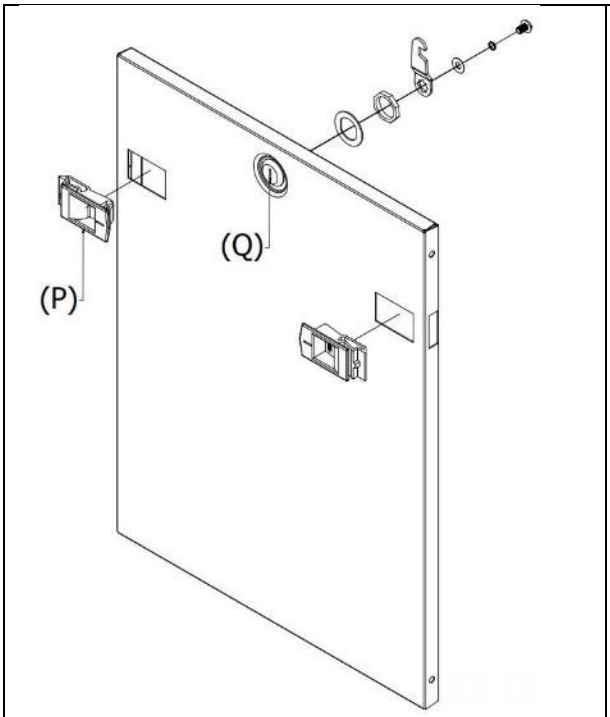

A

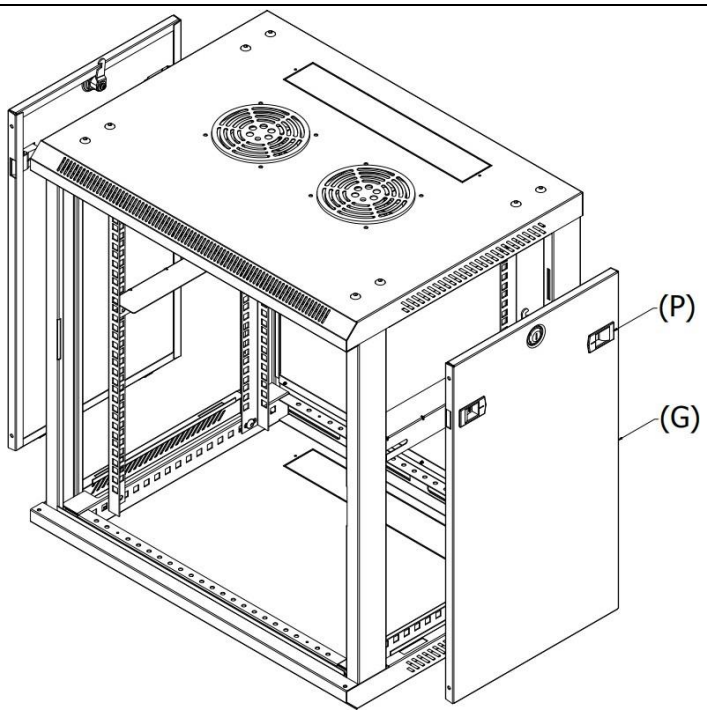

B

-STEP 5. Install the Side Panel Latches (P) and the Side Panel Locks (Q) on the two Side Panels (G) as shown in Diagram A.
-STEP 6. Install the two Side Panels (G) into place using the Side Panel Latches (P) as shown in Diagram B. Once each Side Panel (G) is attached, test to ensure that each Side Panel Lock (Q) locks properly.

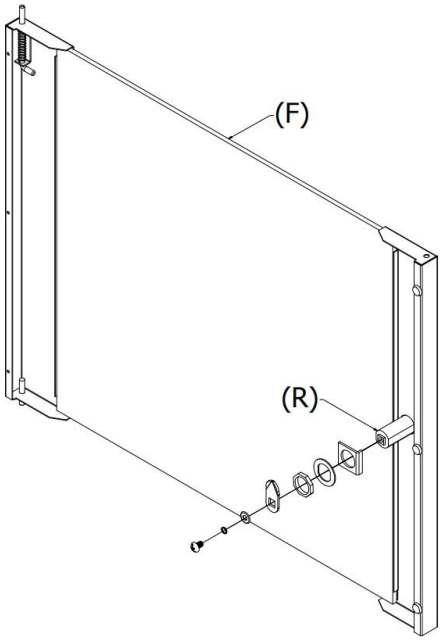

C

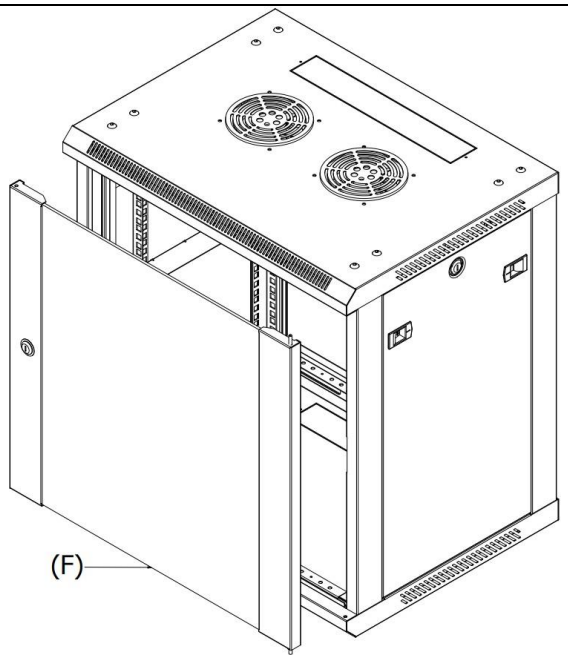

D

STEP 7. Install the Front Door Lock (R) on the Front Door (F) as shown in diagram C.

STEP 8. To attach the Front Door (F) to the cabinet, locate the side with the two pins. Insert the bottom fixed pin into the door hinge hole. With your thumb, pull down on the top spring pin and slide it into place over

the second door hinge hole and release. NOTE: Each side of the front of the cabinet has door hinge holes; this allows you to choose the door swing orientation.

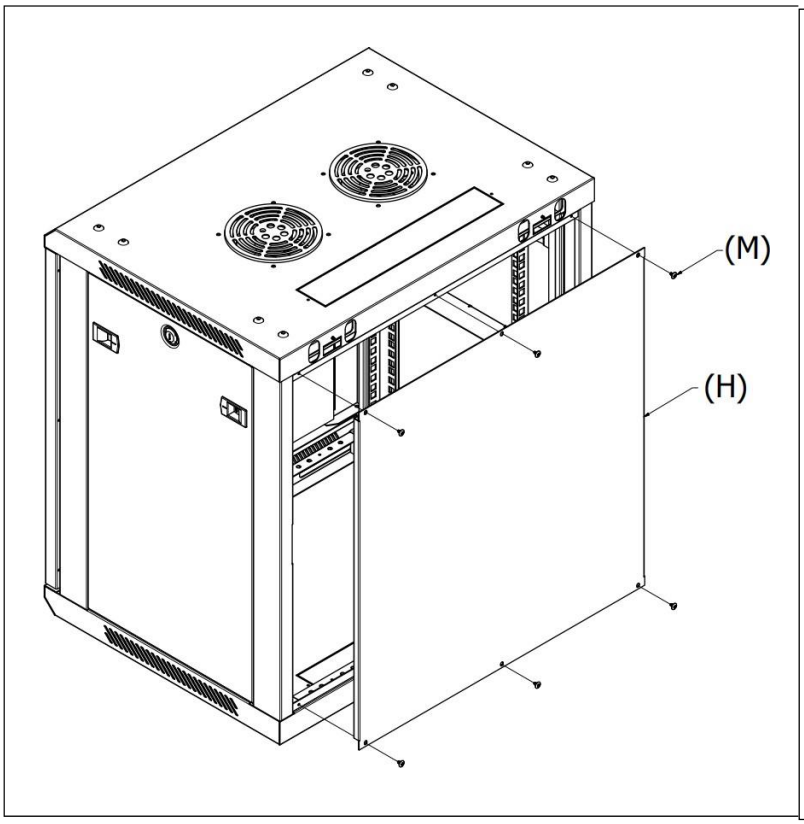

STEP 9. Attach the Back Panel (H) to the cabinet using 6 black M3.5 Screws (M).

3. Mounting the Cabinet to the wall

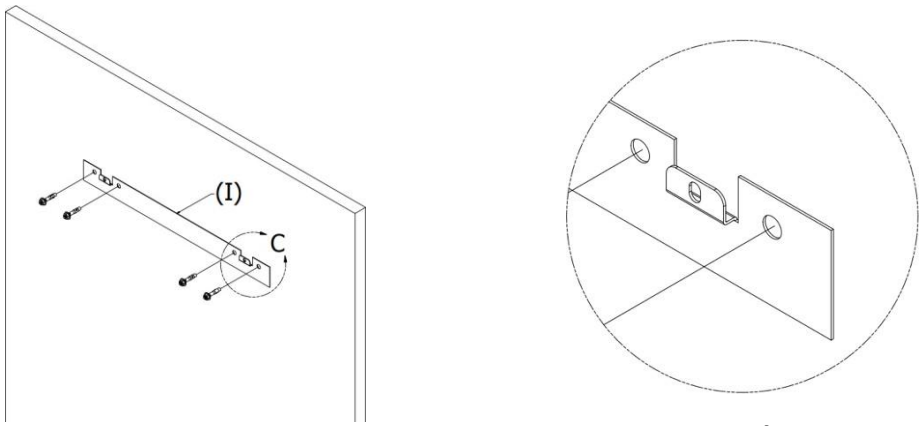

Detail C

Attach the Hanger Bar (I) to a wall or other suitable mounting surface using 4 appropriate anchors.

Note: When mounting the mounting plate to the wall, be sure the 2 mounting hooks are **facing outwards** and away from the wall.

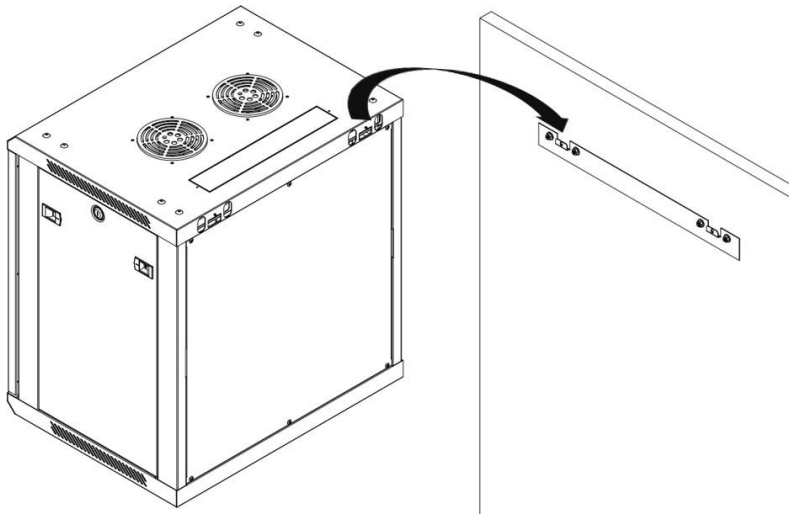

After the Hanger Bar (I) has been securely attached to the mounting surface, hang the cabinet's 2 mounting notches onto the 2 mounting hooks on the plate attached to the wall. The notches will fit over the hooks and the enclosure should slide down onto the hooks until secure.

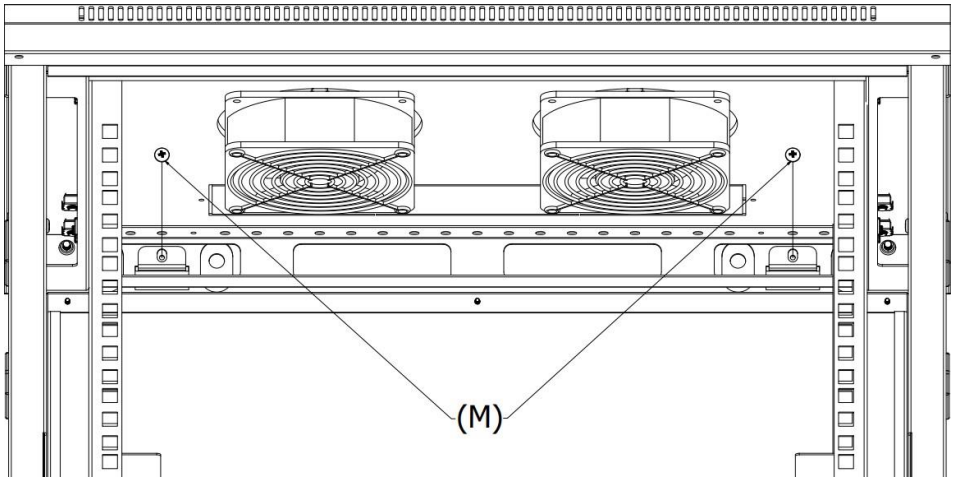

After the Hanger Bar (I) has been secured and the cabinet hung properly, secure the cabinet to the mounting plate using 2 black M3.5 Screws (M) in the holes on the mounting hooks as shown.

Warning: Do not attempt to mount to wall when equipment is mounted inside cabinet. The cabinet can hold up to 135 pounds evenly distributed. Make sure wall surface can hold weight of the cabinet and equipment.

4. Equipment Installation

1 Rack Unit	
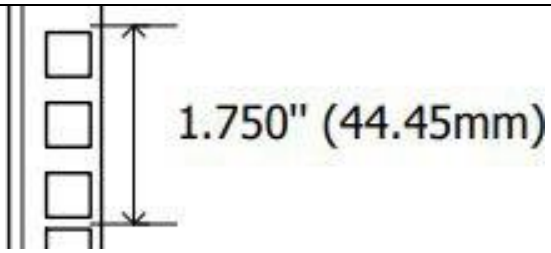	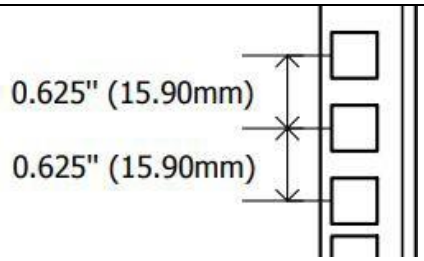

-Squared Hole Mounting

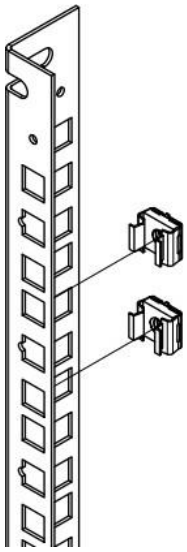	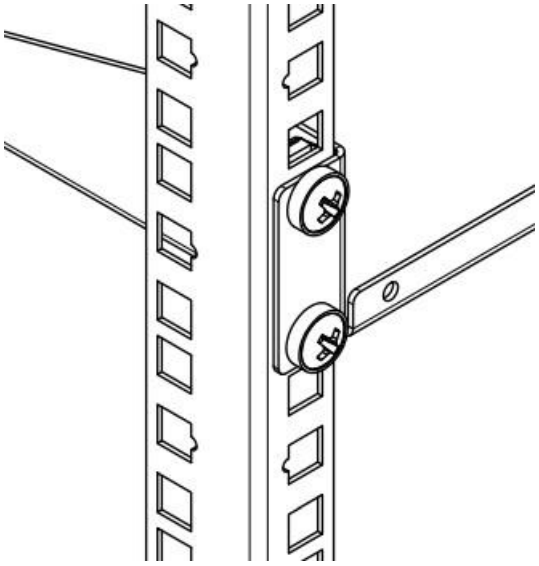

1 Locate the numbered square openings in the Vertical Rack Rails (E) where you plan to install your equipment. Install silver M6 Cage Nuts (O) into the square openings to provide an attachment point for the silver M6 Mounting Screws (N). Note: Consult your equipment documentation to determine how many cage nuts will be required and where they will need to be installed.

a- From the inside of the Vertical Mounting Rails (E), insert one of the flanges of the cage nut through the square opening. Press it against the side of the square opening.

b- Compress the cage nut at the sides slightly to allow the remaining flange to fit through the square opening. When the cage nut is properly installed, both flanges will protrude through the square opening and will be visible on the outer surface of the mounting rail. Repeat steps 1a and 1b until all required cage nuts are installed.

2 After installing the required cage nuts, use the included silver M6 Mounting Screws (N) to secure your equipment into the installed M6 Cage Nuts (O).